General Characteristics

Model number (on compressor nameplate)	MLZ021T5LP9	MLZ021T5LP9
Code number for Singlepack*	121U8028	120U8028
Code number for Industrial pack**	121U8027	120U8027
Drawing number	0XC6300B-1	0XC6300B-1
Suction and discharge connections	Brazed	Brazed
Suction connection	3/4 " ODF	3/4 " ODF
Discharge connection	1/2 " ODF	1/2 " ODF
Oil sight glass	Threaded	Threaded
Oil equalisation connection	None	None
Oil drain connection	1/4" flare	1/4" flare
LP gauge port	None	None
IPR valve	32 bar	32 bar
Swept volume	46,21 cm3/rev	
Displacement @ Nominal speed	8.0 m3/h @ 2900 rpm	
Net weight	31 kg	
Oil charge	1,06 litre, PVE - -	
Maximum system test pressure Low Side / High side	- bar(g) / - bar(g)	
Maximum differential test pressure	- bar	
Maximum number of starts per hour	12	
Refrigerant charge limit	3,63 kg	
Approved refrigerants	R404A, R507, R134a, R407A, R407C, R407F, R22	

Dimensions

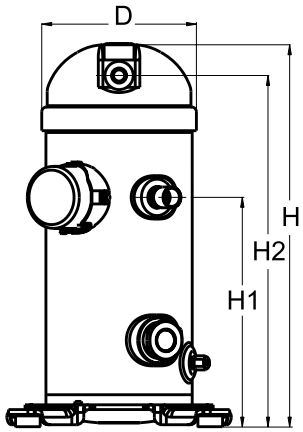

D=164,5 mm
H=412 mm
H1=250 mm
H2=379 mm
H3=- mm

Electrical Characteristics

Nominal voltage	230V/1/50Hz
Voltage range	207-253 V
Winding resistance (main / start) at 25ºC	0,689 Ω / 1,509 Ω
Run capacitors A + C	70 µF + - µF
Start capacitor B	145-175 µF
Start relay	RVA9CKL
Rated Load Amps (RLA)	16 A
Maximum Continuous Current (MCC)	25 A
Locked Rotor Amps (LRA)	97 A
Motor protection	Internal overload protector

Terminal box

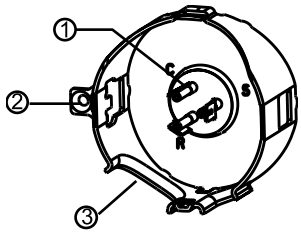

IP22

1: Spade connectors 1/4"
2: Earth connection
3: Power cable passage

Recommended Installation torques

Suction Rotolock nut or valve	0 Nm
Discharge Rotolock nut or valve	0 Nm
Oil sight glass	52,5 Nm
Power connections / Earth connection	0 Nm / 0 Nm

Parts shipped with compressor

Mounting kit with grommets and sleeves
Initial oil charge
Installation instructions

Approvals : CE certified, -, -

*Singlepack: Compressor in cardboard box. 121U... optimised for Danfoss pallet, 120U... optimised for US pallet

**Industrial pack: 121U..: 12 unboxed compressors on Danfoss pallet. 120U..: 16 unboxed compressors on US pallet

Danfoss can accept no responsibility for possible errors in catalogues, brochures and other printed material. Danfoss reserves the right to alter its products without notice.
This also applies to products already on order provided that such alternations can be made without subsequential changes being necessary in specifications already agreed.
All trademarks in this material are property of the respective companies. Danfoss and the Danfoss logotype are trademarks of Danfoss A/S. All rights reserved.

Rotolock accessories, suction side	Code no.
Solder sleeve, P04 (1-1/4" Rotolock, 3/4" ODF)	8153008
Angle adapter, C04 (1-1/4" Rotolock, 3/4" ODF)	8168006
Rotolock valve, V04 (1-1/4" Rotolock, 3/4" ODF)	8168029
Gasket, 1-1/4"	8156131

Rotolock accessories, discharge side	Code no.
Solder sleeve, P06 (1" Rotolock, 1/2" ODF)	8153007
Angle adapter, C06 (1" Rotolock, 1/2" ODF)	8168007
Rotolock valve, V06 (1" Rotolock, 1/2" ODF)	8168031
Gasket, 1"	8156130

Rotolock accessories, sets	Code no.
Solder sleeve adapter set (1-1/4" Rotolock, 3/4" ODF), (1" Rotolock, 1/2" ODF)	120Z0126
Gasket set, 1", 1-1/4", 1-3/4", OSG gaskets black & white	8156009

Oil / lubricants	Code no.
PVE lubricant, 320HV (FVC68D), 1 litre can	120Z5034

Crankcase heaters	Code no.
Belt type crankcase heater, 70 W, 240 V, CE mark, UL	120Z5040

Miscellaneous accessories	Code no.
Acoustic hood	120Z5043
Discharge thermostat kit	7750009

Spare parts	Code no.
Mounting kit for 1 scroll compressor including 4 grommets, 4 sleeves, 4 bolts, 4 washers	120Z5005

Solder sleeve adapter set

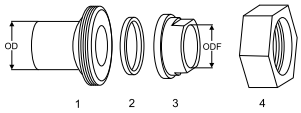

1: Rotolock adapter (Suc & Dis)
2: Gasket (Suc & Dis)
3: Solder sleeve (Suc & Dis)
4: Rotolock nut (Suc & Dis)

Danfoss can accept no responsibility for possible errors in catalogues, brochures and other printed material. Danfoss reserves the right to alter its products without notice.
This also applies to products already on order provided that such alternations can be made without subsequential changes being necessary in specifications already agreed.
All trademarks in this material are property of the respective companies. Danfoss and the Danfoss logotype are trademarks of Danfoss A/S. All rights reserved.

Performance data at 50 Hz, EN 12900 rating conditions, Superheat = 10 K

R22

Cond. temp. in °C (tc)	Evaporating temperature in °C (to)								
	-20	-15	-10	-5	0	5	10		
Cooling capacity in W									
16	4 212	5 058	6 018	7 138	-	-	-	-	-
20	4 084	4 914	5 851	6 939	8 224	-	-	-	-
30	3 731	4 526	5 407	6 421	7 613	9 024	10 694	-	-
40	3 317	4 081	4 911	5 855	6 958	8 264	9 813	-	-
50	-	3 557	4 341	5 219	6 238	7 443	8 877	-	-
60	-	-	-	4 493	5 432	6 541	7 864	-	-
68	-	-	-	-	-	5 745	6 983	-	-
Power input in W									
16	1 048	1 082	1 116	1 152	-	-	-	-	-
20	1 184	1 211	1 237	1 263	1 293	-	-	-	-
30	1 518	1 533	1 545	1 555	1 567	1 581	1 600	-	-
40	1 872	1 882	1 887	1 890	1 891	1 894	1 900	-	-
50	-	2 288	2 295	2 298	2 298	2 298	2 298	-	-
60	-	-	-	2 812	2 818	2 822	2 825	-	-
68	-	-	-	-	-	3 350	3 361	-	-
Current consumption in A									
16	5.60	5.79	5.97	6.16	-	-	-	-	-
20	6.33	6.47	6.61	6.76	6.91	-	-	-	-
30	8.12	8.20	8.26	8.32	8.38	8.45	8.56	-	-
40	10.01	10.06	10.09	10.11	10.11	10.13	10.16	-	-
50	-	12.24	12.28	12.29	12.29	12.29	12.29	-	-
60	-	-	-	15.03	15.07	15.09	15.11	-	-
68	-	-	-	-	-	17.91	17.98	-	-
Mass flow in kg/h									
16	80	96	114	134	-	-	-	-	-
20	80	96	113	133	157	-	-	-	-
30	79	95	112	132	155	182	213	-	-
40	76	92	110	130	153	180	211	-	-
50	-	87	106	126	150	177	208	-	-
60	-	-	-	120	144	172	204	-	-
68	-	-	-	-	-	166	199	-	-
Coefficient of performance (C.O.P.)									
16	4.02	4.67	5.39	6.20	-	-	-	-	-
20	3.45	4.06	4.73	5.49	6.36	-	-	-	-
30	2.46	2.95	3.50	4.13	4.86	5.71	6.68	-	-
40	1.77	2.17	2.60	3.10	3.68	4.36	5.17	-	-
50	-	1.55	1.89	2.27	2.71	3.24	3.86	-	-
60	-	-	-	1.60	1.93	2.32	2.78	-	-
68	-	-	-	-	-	1.72	2.08	-	-

Nominal performance at to = -10 °C, tc = 45 °C

Cooling capacity	4 637	W
Power input	2 081	W
Current consumption	11.13	A
Mass flow	108	kg/h
C.O.P.	2.23	

to: Evaporating temperature at dew point
tc: Condensing temperature at dew point
Rating conditions : Superheat = 10 K , Subcooling = 0 K

Pressure switch settings

Maximum HP switch setting	29.8	bar(g)
Minimum LP switch setting	0.5	bar(g)
LP pump down setting	0.95	bar(g)

Sound power data

Sound power level	67	dB(A)
With accoustic hood	59	dB(A)

All performance data +/- 5%

Danfoss can accept no responsibility for possible errors in catalogues, brochures and other printed material. Danfoss reserves the right to alter its products without notice.
This also applies to products already on order provided that such alternations can be made without subsequential changes being necessary in specifications already agreed.
All trademarks in this material are property of the respective companies. Danfoss and the Danfoss logotype are trademarks of Danfoss A/S. All rights reserved.

Performance data at 50 Hz, EN 12900 rating conditions, Suction temp. = 20 °C

R22

Cond. temp. in °C (tc)	Evaporating temperature in °C (to)								
	-20	-15	-10	-5	0	5	10		
Cooling capacity in W									
16	4 110	4 950	5 908	7 033	-	-	-	-	-
20	3 995	4 820	5 754	6 847	8 144	-	-	-	-
30	3 677	4 467	5 346	6 360	7 558	8 987	10 694	-	-
40	-	4 058	4 884	5 826	6 930	8 243	9 813	-	-
50	-	-	-	5 223	6 237	7 439	8 877	-	-
60	-	-	-	-	5 457	6 553	7 864	-	-
68	-	-	-	-	-	-	6 983	-	-
Power input in W									
16	1 048	1 082	1 116	1 152	-	-	-	-	-
20	1 184	1 211	1 237	1 263	1 293	-	-	-	-
30	1 518	1 533	1 545	1 555	1 567	1 581	1 600	-	-
40	-	1 882	1 887	1 890	1 891	1 894	1 900	-	-
50	-	-	-	2 298	2 298	2 298	2 298	-	-
60	-	-	-	-	2 818	2 822	2 825	-	-
68	-	-	-	-	-	-	3 361	-	-
Current consumption in A									
16	5.60	5.79	5.97	6.16	-	-	-	-	-
20	6.33	6.47	6.61	6.76	6.91	-	-	-	-
30	8.12	8.20	8.26	8.32	8.38	8.45	8.56	-	-
40	-	10.06	10.09	10.11	10.11	10.13	10.16	-	-
50	-	-	-	12.29	12.29	12.29	12.29	-	-
60	-	-	-	-	15.07	15.09	15.11	-	-
68	-	-	-	-	-	-	17.98	-	-
Mass flow in kg/h									
16	71	86	104	125	-	-	-	-	-
20	71	86	104	125	150	-	-	-	-
30	70	85	103	123	148	177	213	-	-
40	-	83	101	121	146	175	211	-	-
50	-	-	-	118	143	173	208	-	-
60	-	-	-	-	138	168	204	-	-
68	-	-	-	-	-	-	199	-	-
Coefficient of performance (C.O.P.)									
16	3.92	4.57	5.29	6.11	-	-	-	-	-
20	3.38	3.98	4.65	5.42	6.30	-	-	-	-
30	2.42	2.91	3.46	4.09	4.82	5.68	6.68	-	-
40	-	2.16	2.59	3.08	3.66	4.35	5.17	-	-
50	-	-	-	2.27	2.71	3.24	3.86	-	-
60	-	-	-	-	1.94	2.32	2.78	-	-
68	-	-	-	-	-	-	2.08	-	-

Nominal performance at to = -10 °C, tc = 45 °C

Cooling capacity	4 628	W
Power input	2 081	W
Current consumption	11.13	A
Mass flow	99	kg/h
C.O.P.	2.22	

to: Evaporating temperature at dew point
tc: Condensing temperature at dew point
Rating conditions : Suction gas temp. = 20 °C , Subcooling = 0 K

Pressure switch settings

Maximum HP switch setting	29.8	bar(g)
Minimum LP switch setting	0.5	bar(g)
LP pump down setting	0.95	bar(g)

Sound power data

Sound power level	67	dB(A)
With accoustic hood	59	dB(A)

All performance data +/- 5%

Danfoss can accept no responsibility for possible errors in catalogues, brochures and other printed material. Danfoss reserves the right to alter its products without notice.
This also applies to products already on order provided that such alternations can be made without subsequential changes being necessary in specifications already agreed.
All trademarks in this material are property of the respective companies. Danfoss and the Danfoss logotype are trademarks of Danfoss A/S. All rights reserved.

Performance data at 50 Hz, EN 12900 rating conditions, Superheat = 10 K

R134a

Cond. temp. in °C (tc)	Evaporating temperature in °C (to)								
	-15	-10	-5	0	5	10	15		
Cooling capacity in W									
22	2 787	3 527	4 368	5 316	6 376	-	-	-	-
30	2 558	3 266	4 083	5 015	6 066	7 243	-	-	-
40	2 259	2 899	3 658	4 542	5 554	6 702	7 989	-	-
50	-	2 521	3 191	3 995	4 937	6 024	7 260	-	-
60	-	-	2 716	3 409	4 250	5 245	6 399	-	-
70	-	-	-	2 820	3 529	4 401	5 442	-	-
73	-	-	-	2 648	3 312	4 141	5 141	-	-
Power input in W									
22	1 001	1 009	1 030	1 059	1 095	-	-	-	-
30	1 141	1 149	1 171	1 200	1 235	1 271	-	-	-
40	1 348	1 359	1 381	1 411	1 444	1 479	1 510	-	-
50	-	1 622	1 645	1 676	1 709	1 742	1 771	-	-
60	-	-	1 982	2 013	2 047	2 079	2 107	-	-
70	-	-	-	2 442	2 476	2 508	2 534	-	-
73	-	-	-	2 590	2 625	2 657	2 682	-	-
Current consumption in A									
22	5.36	5.40	5.51	5.67	5.86	-	-	-	-
30	6.10	6.15	6.26	6.42	6.60	6.80	-	-	-
40	7.21	7.26	7.38	7.54	7.72	7.91	8.07	-	-
50	-	8.67	8.80	8.96	9.14	9.32	9.47	-	-
60	-	-	10.60	10.77	10.95	11.12	11.26	-	-
70	-	-	-	13.06	13.24	13.41	13.55	-	-
73	-	-	-	13.85	14.04	14.21	14.34	-	-
Mass flow in kg/h									
22	59	74	91	108	127	-	-	-	-
30	59	74	91	109	130	152	-	-	-
40	57	72	89	109	130	154	180	-	-
50	-	70	87	106	128	153	181	-	-
60	-	-	84	103	125	150	179	-	-
70	-	-	-	99	121	146	175	-	-
73	-	-	-	98	119	144	173	-	-
Coefficient of performance (C.O.P.)									
22	2.78	3.50	4.24	5.02	5.82	-	-	-	-
30	2.24	2.84	3.49	4.18	4.91	5.70	-	-	-
40	1.68	2.13	2.65	3.22	3.85	4.53	5.29	-	-
50	-	1.55	1.94	2.38	2.89	3.46	4.10	-	-
60	-	-	1.37	1.69	2.08	2.52	3.04	-	-
70	-	-	-	1.16	1.43	1.76	2.15	-	-
73	-	-	-	1.02	1.26	1.56	1.92	-	-

Nominal performance at to = -10 °C, tc = 45 °C

Cooling capacity	2 709	W
Power input	1 482	W
Current consumption	7.93	A
Mass flow	71	kg/h
C.O.P.	1.83	

to: Evaporating temperature at dew point
tc: Condensing temperature at dew point
Rating conditions : Superheat = 10 K , Subcooling = 0 K

Pressure switch settings

Maximum HP switch setting	23.6	bar(g)
Minimum LP switch setting	0.45	bar(g)
LP pump down setting	0.85	bar(g)

Sound power data

Sound power level	67	dB(A)
With accoustic hood	59	dB(A)

All performance data +/- 5%

Danfoss can accept no responsibility for possible errors in catalogues, brochures and other printed material. Danfoss reserves the right to alter its products without notice.
This also applies to products already on order provided that such alternations can be made without subsequential changes being necessary in specifications already agreed.
All trademarks in this material are property of the respective companies. Danfoss and the Danfoss logotype are trademarks of Danfoss A/S. All rights reserved.

Performance data at 50 Hz, EN 12900 rating conditions, Suction temp. = 20 °C

R134a

Cond. temp. in °C (tc)	Evaporating temperature in °C (to)								
	-15	-10	-5	0	5	10	15		
Cooling capacity in W									
22	2 832	3 568	4 402	5 339	6 387	-	-	-	-
30	-	3 326	4 135	5 053	6 087	7 243	-	-	-
40	-	-	3 734	4 600	5 587	6 702	7 952	-	-
50	-	-	3 288	4 072	4 983	6 024	7 202	-	-
60	-	-	-	3 504	4 307	5 245	-	-	-
70	-	-	-	-	3 598	4 401	-	-	-
73	-	-	-	-	3 383	4 141	-	-	-
Power input in W									
22	1 001	1 009	1 030	1 059	1 095	-	-	-	-
30	-	1 149	1 171	1 200	1 235	1 271	-	-	-
40	-	-	1 381	1 411	1 444	1 479	1 510	-	-
50	-	-	1 645	1 676	1 709	1 742	1 771	-	-
60	-	-	-	2 013	2 047	2 079	-	-	-
70	-	-	-	-	2 476	2 508	-	-	-
73	-	-	-	-	2 625	2 657	-	-	-
Current consumption in A									
22	5.36	5.40	5.51	5.67	5.86	-	-	-	-
30	-	6.15	6.26	6.42	6.60	6.80	-	-	-
40	-	-	7.38	7.54	7.72	7.91	8.07	-	-
50	-	-	8.80	8.96	9.14	9.32	9.47	-	-
60	-	-	-	10.77	10.95	11.12	-	-	-
70	-	-	-	-	13.24	13.41	-	-	-
73	-	-	-	-	14.04	14.21	-	-	-
Mass flow in kg/h									
22	53	68	85	103	124	-	-	-	-
30	-	68	85	104	127	152	-	-	-
40	-	-	84	104	127	154	185	-	-
50	-	-	81	102	125	153	186	-	-
60	-	-	-	98	122	150	-	-	-
70	-	-	-	-	118	146	-	-	-
73	-	-	-	-	116	144	-	-	-
Coefficient of performance (C.O.P.)									
22	2.83	3.54	4.28	5.04	5.83	-	-	-	-
30	-	2.89	3.53	4.21	4.93	5.70	-	-	-
40	-	-	2.70	3.26	3.87	4.53	5.27	-	-
50	-	-	2.00	2.43	2.92	3.46	4.07	-	-
60	-	-	-	1.74	2.10	2.52	-	-	-
70	-	-	-	-	1.45	1.76	-	-	-
73	-	-	-	-	1.29	1.56	-	-	-

Nominal performance at to = -10 °C, tc = 45 °C

Cooling capacity	-	W
Power input	-	W
Current consumption	-	A
Mass flow	-	kg/h
C.O.P.	-	

Pressure switch settings

Maximum HP switch setting	23.6	bar(g)
Minimum LP switch setting	0.45	bar(g)
LP pump down setting	0.85	bar(g)

Sound power data

Sound power level	67	dB(A)
With accoustic hood	59	dB(A)

to: Evaporating temperature at dew point
tc: Condensing temperature at dew point
Rating conditions : Suction gas temp. = 20 °C , Subcooling = 0 K

All performance data +/- 5%

Danfoss can accept no responsibility for possible errors in catalogues, brochures and other printed material. Danfoss reserves the right to alter its products without notice.
This also applies to products already on order provided that such alternations can be made without subsequential changes being necessary in specifications already agreed.
All trademarks in this material are property of the respective companies. Danfoss and the Danfoss logotype are trademarks of Danfoss A/S. All rights reserved.

Performance data at 50 Hz, EN 12900 rating conditions, Suction temp. = 20 °C

R404A

Cond. temp. in °C (tc)	Evaporating temperature in °C (to)								
	-30	-25	-20	-15	-10	-5	0	5	10
Cooling capacity in W									
10	2 705	3 400	4 252	5 276	6 488	-	-	-	-
20	2 568	3 277	4 122	5 119	6 284	7 633	9 182	-	-
30	2 338	3 028	3 835	4 773	5 860	7 110	8 539	10 164	12 000
40	-	2 679	3 415	4 263	5 239	6 359	7 637	9 091	10 736
50	-	-	2 887	3 613	4 447	5 404	6 501	7 752	9 173
60	-	-	-	-	3 508	4 271	5 153	6 170	7 337
Power input in W									
10	1 124	1 139	1 156	1 173	1 184	-	-	-	-
20	1 386	1 396	1 415	1 439	1 464	1 486	1 502	-	-
30	1 707	1 705	1 718	1 742	1 773	1 808	1 843	1 874	1 896
40	-	2 095	2 095	2 112	2 142	2 182	2 228	2 276	2 322
50	-	-	2 574	2 576	2 598	2 636	2 686	2 744	2 807
60	-	-	-	-	3 172	3 200	3 246	3 307	3 378
Current consumption in A									
10	7.47	7.40	7.29	7.14	6.95	-	-	-	-
20	9.00	9.05	9.06	9.07	9.05	9.02	8.99	-	-
30	10.00	10.09	10.17	10.26	10.36	10.46	10.57	10.70	10.84
40	-	10.92	11.01	11.12	11.26	11.42	11.62	11.85	12.12
50	-	-	11.96	12.04	12.16	12.32	12.54	12.81	13.14
60	-	-	-	-	13.44	13.55	13.72	13.97	14.30
Mass flow in kg/h									
10	54	69	87	108	133	-	-	-	-
20	56	73	92	114	141	173	211	-	-
30	57	74	94	118	145	178	217	263	316
40	-	73	94	118	146	180	219	266	319
50	-	-	91	115	144	178	217	264	318
60	-	-	-	-	138	171	211	257	311
Coefficient of performance (C.O.P.)									
10	2.41	2.99	3.68	4.50	5.48	-	-	-	-
20	1.85	2.35	2.91	3.56	4.29	5.14	6.11	-	-
30	1.37	1.78	2.23	2.74	3.30	3.93	4.63	5.42	6.33
40	-	1.28	1.63	2.02	2.45	2.91	3.43	3.99	4.62
50	-	-	1.12	1.40	1.71	2.05	2.42	2.82	3.27
60	-	-	-	-	1.11	1.33	1.59	1.87	2.17

Nominal performance at to = -10 °C, tc = 45 °C

Cooling capacity	4 863	W
Power input	2 357	W
Current consumption	11.68	A
Mass flow	146	kg/h
C.O.P.	2.06	

CERTIFIED PRODUCT ASERCOM

Pressure switch settings

Maximum HP switch setting	29.7	bar(g)
Minimum LP switch setting	1.4	bar(g)
LP pump down setting	2	bar(g)

Sound power data

Sound power level	67	dB(A)
With accoustic hood	59	dB(A)

to: Evaporating temperature at dew point
tc: Condensing temperature at dew point
Rating conditions : Suction gas temp. = 20 °C , Subcooling = 0 K

All performance data +/- 5%

Danfoss can accept no responsibility for possible errors in catalogues, brochures and other printed material. Danfoss reserves the right to alter its products without notice.
This also applies to products already on order provided that such alternations can be made without subsequential changes being necessary in specifications already agreed.
All trademarks in this material are property of the respective companies. Danfoss and the Danfoss logotype are trademarks of Danfoss A/S. All rights reserved.

Performance data at 50 Hz, EN 12900 rating conditions, Superheat = 10 K

R404A

Cond. temp. in °C (tc)	Evaporating temperature in °C (to)								
	-30	-25	-20	-15	-10	-5	0	5	10
Cooling capacity in W									
10	2 599	3 290	4 143	5 174	6 402	-	-	-	-
20	2 415	3 112	3 952	4 953	6 133	7 508	9 095	-	-
30	2 139	2 807	3 601	4 539	5 639	6 920	8 398	10 088	12 000
40	1 796	2 403	3 119	3 961	4 949	6 102	7 439	8 979	10 736
50	-	-	2 533	3 247	4 090	5 082	6 246	7 603	9 173
60	-	-	-	-	3 087	3 886	4 842	5 983	7 337
Power input in W									
10	1 124	1 139	1 156	1 173	1 184	-	-	-	-
20	1 386	1 396	1 415	1 439	1 464	1 486	1 502	-	-
30	1 707	1 705	1 718	1 742	1 773	1 808	1 843	1 874	1 896
40	2 116	2 095	2 095	2 112	2 142	2 182	2 228	2 276	2 322
50	-	-	2 574	2 576	2 598	2 636	2 686	2 744	2 807
60	-	-	-	-	3 172	3 200	3 246	3 307	3 378
Current consumption in A									
10	7.47	7.40	7.29	7.14	6.95	-	-	-	-
20	9.00	9.05	9.06	9.07	9.05	9.02	8.99	-	-
30	10.00	10.09	10.17	10.26	10.36	10.46	10.57	10.70	10.84
40	10.85	10.92	11.01	11.12	11.26	11.42	11.62	11.85	12.12
50	-	-	11.96	12.04	12.16	12.32	12.54	12.81	13.14
60	-	-	-	-	13.44	13.55	13.72	13.97	14.30
Mass flow in kg/h									
10	64	81	100	122	147	-	-	-	-
20	67	85	105	129	156	187	222	-	-
30	67	86	108	132	160	193	229	270	316
40	66	86	108	133	162	194	232	273	319
50	-	-	105	130	159	192	229	271	318
60	-	-	-	-	152	185	223	264	311
Coefficient of performance (C.O.P.)									
10	2.31	2.89	3.58	4.41	5.41	-	-	-	-
20	1.74	2.23	2.79	3.44	4.19	5.05	6.05	-	-
30	1.25	1.65	2.10	2.61	3.18	3.83	4.56	5.38	6.33
40	0.85	1.15	1.49	1.88	2.31	2.80	3.34	3.95	4.62
50	-	-	0.98	1.26	1.57	1.93	2.33	2.77	3.27
60	-	-	-	-	0.97	1.21	1.49	1.81	2.17

Nominal performance at to = -10 °C, tc = 45 °C

Cooling capacity	4 539	W
Power input	2 357	W
Current consumption	11.68	A
Mass flow	161	kg/h
C.O.P.	1.93	

to: Evaporating temperature at dew point
tc: Condensing temperature at dew point
Rating conditions : Superheat = 10 K , Subcooling = 0 K

Pressure switch settings

Maximum HP switch setting	29.7	bar(g)
Minimum LP switch setting	1.4	bar(g)
LP pump down setting	2	bar(g)

Sound power data

Sound power level	67	dB(A)
With accoustic hood	59	dB(A)

All performance data +/- 5%

Danfoss can accept no responsibility for possible errors in catalogues, brochures and other printed material. Danfoss reserves the right to alter its products without notice.
This also applies to products already on order provided that such alternations can be made without subsequential changes being necessary in specifications already agreed.
All trademarks in this material are property of the respective companies. Danfoss and the Danfoss logotype are trademarks of Danfoss A/S. All rights reserved.

Performance data at 50 Hz, EN 12900 rating conditions

R407F

Cond. temp. in °C (tc)	Evaporating temperature in °C (to)								
	-23	-20	-15	-10	-5	0	5	10	
Cooling capacity in W									
10	3 823	4 387	5 469	6 746	-	-	-	-	-
20	3 436	3 971	4 993	6 196	7 602	9 232	-	-	-
30	3 012	3 513	4 464	5 582	6 888	8 405	10 153	12 157	-
40	2 558	3 017	3 887	4 909	6 106	7 498	9 108	10 958	-
45	-	-	3 582	4 553	5 690	7 016	8 553	10 322	-
50	-	-	-	4 184	5 259	6 517	7 977	9 663	-
55	-	-	-	-	4 814	6 000	7 382	8 982	-
60	-	-	-	-	-	-	-	-	-
Power input in W									
10	1 172	1 182	1 202	1 234	-	-	-	-	-
20	1 360	1 373	1 390	1 410	1 441	1 489	-	-	-
30	1 639	1 658	1 681	1 700	1 720	1 749	1 795	1 864	-
40	2 034	2 066	2 104	2 128	2 147	2 166	2 194	2 237	-
45	-	-	2 372	2 403	2 424	2 442	2 464	2 498	-
50	-	-	-	2 723	2 749	2 768	2 786	2 812	-
55	-	-	-	-	3 124	3 146	3 163	3 184	-
60	-	-	-	-	-	-	-	-	-
Current consumption in A									
10	8.20	8.17	8.12	8.06	-	-	-	-	-
20	8.92	8.93	8.95	8.96	8.97	8.97	-	-	-
30	9.65	9.70	9.77	9.84	9.89	9.95	10.01	10.08	-
40	10.86	10.93	11.04	11.14	11.24	11.33	11.43	11.53	-
45	-	-	11.99	12.10	12.21	12.31	12.42	12.54	-
50	-	-	-	13.34	13.45	13.57	13.69	13.81	-
55	-	-	-	-	15.03	15.15	15.27	15.40	-
60	-	-	-	-	-	-	-	-	-
Mass flow in kg/h									
10	67	76	94	114	-	-	-	-	-
20	65	74	92	113	137	164	-	-	-
30	62	72	90	110	134	162	193	229	-
40	58	68	86	107	131	158	190	225	-
45	-	-	83	104	128	156	187	223	-
50	-	-	-	101	125	153	184	220	-
55	-	-	-	-	122	150	181	217	-
60	-	-	-	-	-	-	-	-	-
Coefficient of performance (C.O.P.)									
10	3.26	3.71	4.55	5.47	-	-	-	-	-
20	2.53	2.89	3.59	4.39	5.28	6.20	-	-	-
30	1.84	2.12	2.65	3.28	4.01	4.81	5.66	6.52	-
40	1.26	1.46	1.85	2.31	2.84	3.46	4.15	4.90	-
45	-	-	1.51	1.89	2.35	2.87	3.47	4.13	-
50	-	-	-	1.54	1.91	2.35	2.86	3.44	-
55	-	-	-	-	1.54	1.91	2.33	2.82	-
60	-	-	-	-	-	-	-	-	-

Nominal performance at to = -10 °C, tc = 45 °C

Cooling capacity	4 553	W
Power input	2 403	W
Current consumption	12.10	A
Mass flow	104	kg/h
C.O.P.	1.89	

Pressure switch settings

Maximum HP switch setting	29.7	bar(g)
Minimum LP switch setting	1.4	bar(g)
LP pump down setting	2	bar(g)

Sound power data

Sound power level	67	dB(A)
With accoustic hood	59	dB(A)

to: Evaporating temperature at dew point
tc: Condensing temperature at dew point
Rating conditions : Superheat = 10 K , Subcooling = 0 K

All performance data +/- 5%

Danfoss can accept no responsibility for possible errors in catalogues, brochures and other printed material. Danfoss reserves the right to alter its products without notice.
This also applies to products already on order provided that such alternations can be made without subsequential changes being necessary in specifications already agreed.
All trademarks in this material are property of the respective companies. Danfoss and the Danfoss logotype are trademarks of Danfoss A/S. All rights reserved.

Performance data at 50 Hz, ARI rating conditions

R407F

Cond. temp. in °C (tc)	Evaporating temperature in °C (to)								
	-23	-20	-15	-10	-5	0	5	10	
Cooling capacity in W									
10	4 040	4 635	5 774	7 117	-	-	-	-	-
20	3 653	4 220	5 302	6 574	8 058	9 779	-	-	-
30	3 227	3 761	4 775	5 965	7 354	8 965	10 821	12 945	-
40	-	3 262	4 198	5 295	6 578	8 069	9 792	11 769	-
45	-	-	3 892	4 940	6 166	7 594	9 246	11 147	-
50	-	-	-	4 572	5 739	7 102	8 682	10 504	-
55	-	-	-	-	-	6 595	8 102	9 844	-
60	-	-	-	-	-	-	-	-	-
Power input in W									
10	1 172	1 182	1 202	1 234	-	-	-	-	-
20	1 360	1 373	1 390	1 410	1 441	1 489	-	-	-
30	1 639	1 658	1 681	1 700	1 720	1 749	1 795	1 864	-
40	-	2 066	2 104	2 128	2 147	2 166	2 194	2 237	-
45	-	-	2 372	2 403	2 424	2 442	2 464	2 498	-
50	-	-	-	2 723	2 749	2 768	2 786	2 812	-
55	-	-	-	-	-	3 146	3 163	3 184	-
60	-	-	-	-	-	-	-	-	-
Current consumption in A									
10	8.20	8.17	8.12	8.06	-	-	-	-	-
20	8.92	8.93	8.95	8.96	8.97	8.97	-	-	-
30	9.65	9.70	9.77	9.84	9.89	9.95	10.01	10.08	-
40	-	10.93	11.04	11.14	11.24	11.33	11.43	11.53	-
45	-	-	11.99	12.10	12.21	12.31	12.42	12.54	-
50	-	-	-	13.34	13.45	13.57	13.69	13.81	-
55	-	-	-	-	-	15.15	15.27	15.40	-
60	-	-	-	-	-	-	-	-	-
Mass flow in kg/h									
10	66	76	93	113	-	-	-	-	-
20	64	74	92	112	136	163	-	-	-
30	62	71	89	110	134	161	192	227	-
40	-	67	85	106	130	157	188	224	-
45	-	-	83	104	128	155	186	221	-
50	-	-	-	101	125	152	183	219	-
55	-	-	-	-	-	149	180	216	-
60	-	-	-	-	-	-	-	-	-
Coefficient of performance (C.O.P.)									
10	3.45	3.92	4.80	5.77	-	-	-	-	-
20	2.69	3.07	3.81	4.66	5.59	6.57	-	-	-
30	1.97	2.27	2.84	3.51	4.28	5.13	6.03	6.95	-
40	-	1.58	2.00	2.49	3.06	3.73	4.46	5.26	-
45	-	-	1.64	2.06	2.54	3.11	3.75	4.46	-
50	-	-	-	1.68	2.09	2.57	3.12	3.73	-
55	-	-	-	-	-	2.10	2.56	3.09	-
60	-	-	-	-	-	-	-	-	-

Nominal performance at to = -10 °C, tc = 45 °C

Cooling capacity	4 940	W
Power input	2 403	W
Current consumption	12.10	A
Mass flow	104	kg/h
C.O.P.	2.06	

Pressure switch settings

Maximum HP switch setting	29.7	bar(g)
Minimum LP switch setting	1.4	bar(g)
LP pump down setting	2	bar(g)

Sound power data

Sound power level	67	dB(A)
With accoustic hood	59	dB(A)

to: Evaporating temperature at dew point
tc: Condensing temperature at dew point
Rating conditions : Superheat = 11.1 K , Subcooling = 8.3 K

All performance data +/- 5%

Danfoss can accept no responsibility for possible errors in catalogues, brochures and other printed material. Danfoss reserves the right to alter its products without notice.
This also applies to products already on order provided that such alternations can be made without subsequential changes being necessary in specifications already agreed.
All trademarks in this material are property of the respective companies. Danfoss and the Danfoss logotype are trademarks of Danfoss A/S. All rights reserved.

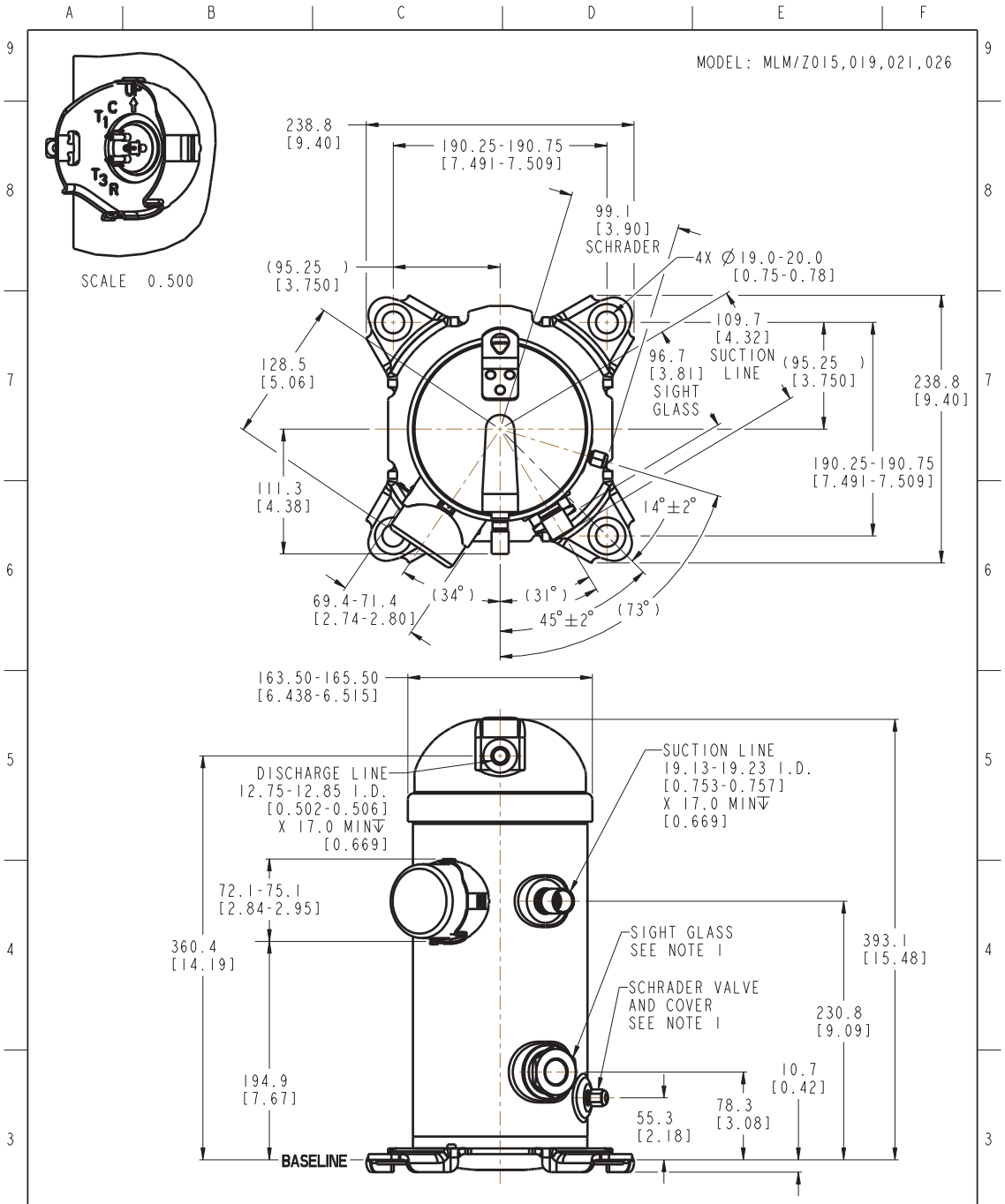

NOTES:
1. OIL SIGHT GLASS AND SCHRADER VALVE ARE OPTIONAL.

ATTENTION: THIS DRAWING NOT FOR PRODUCTION USE UNLESS VERIFIED AS VALID IN PRODUCTION CONTROL SYSTEM BY VERSION, AND/OR CHANGE NUMBER.

DOC REV	PDM REV	DESCRIPTION OF CHANGES	DATE	DR/PCR/NPCA
38519	1-1	UPDATED FORMAT, RELEASE AS EFFECTIVE TO PRODUCTION	02/10/10	8040-03
39461	1	RELEASE AS EFFECTIVE TO PRODUCTION	02/19/09	7087-01

UNLESS OTHERWISE SPECIFIED
.X : ±3.0 .XXX : ±N/A
.XX : ±N/A ANG° : ±N/A
INTERPRET PER ANSI Y14.5M-1994
TYPICAL SURFACE FINISH 3.2
DIMENSIONS ARE IN MILLIMETERS
⊙ DENOTES CRITICAL DIMENSION
PROJECTION
SCALE 0.300
SIZE B
MATERIAL
DANFOSS STANDARD
DESIGNATION
OUTLINE, COMPRESSOR
(MC MEDIUM TEMP)

REPLACED		DESIGNED	JEB 02/10/10
SURF AREA(m^2)		CHECKED	
MASS(kg)		APPROVED	
PRI REFRIG			
PRODUCT FAM			

CONFIDENTIAL: PROPERTY OF DANFOSS COMMERCIAL COMPRESSORS. NOT TO BE HANDED OVER TO, COPIED OR USED BY THIRD PARTY, TWO OR THREE DIMENSIONAL REPRODUCTION OF CONTENTS TO BE AUTHORIZED BY DANFOSS USCCA.

MAT NO
DWG NO 0XC6300B REV 38519
ECM NO 500000038519 SHT 1 of 1

Danfoss can accept no responsibility for possible errors in catalogues, brochures and other printed material. Danfoss reserves the right to alter its products without notice.
This also applies to products already on order provided that such alternations can be made without subsequential changes being necessary in specifications already agreed.
All trademarks in this material are property of the respective companies. Danfoss, the Danfoss logotype and Maneurop are trademarks of Danfoss A/S. All rights reserved.

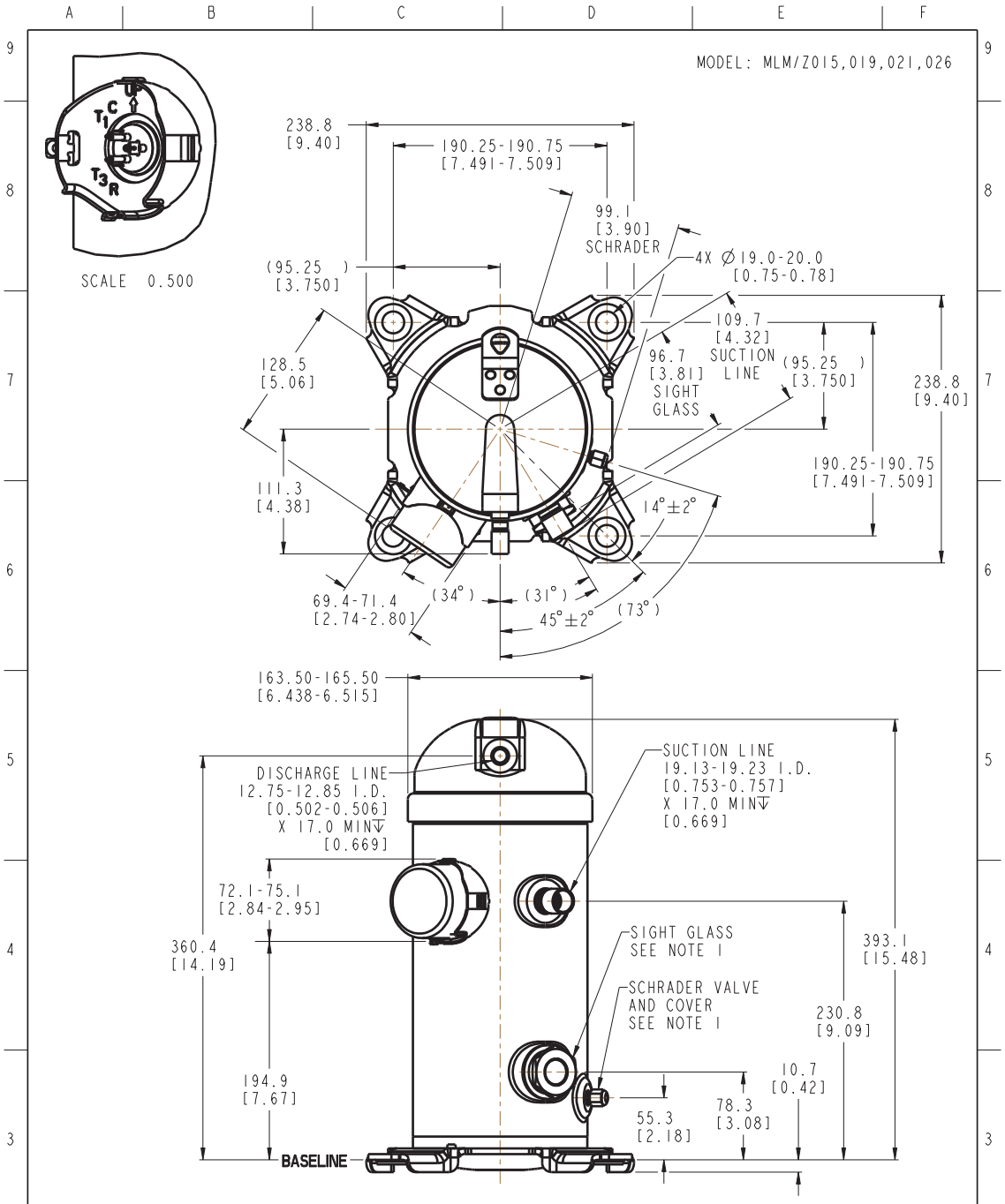

NOTES:
1. OIL SIGHT GLASS AND SCHRADER VALVE ARE OPTIONAL.

ATTENTION: THIS DRAWING NOT FOR PRODUCTION USE UNLESS VERIFIED AS VALID IN PRODUCTION CONTROL SYSTEM BY VERSION, AND/OR CHANGE NUMBER.

DOC REV	PDM REV	DESCRIPTION OF CHANGES	DATE	DR/PCR/NPCA
38519	1-1	UPDATED FORMAT, RELEASE AS EFFECTIVE TO PRODUCTION	02/10/10	8040-03
39461	1	RELEASE AS EFFECTIVE TO PRODUCTION	02/19/09	7087-01

UNLESS OTHERWISE SPECIFIED
.X : ±3.0 .XXX : ±N/A
.XX : ±N/A ANG° : ±N/A
INTERPRET PER ANSI Y14.5M-1994
TYPICAL SURFACE FINISH 3.2
DIMENSIONS ARE IN MILLIMETERS
⊙ DENOTES CRITICAL DIMENSION
PROJECTION
SCALE 0.300
SIZE B
MATERIAL
DANFOSS STANDARD
DESIGNATION
OUTLINE, COMPRESSOR
(MC MEDIUM TEMP)

REPLACED		DESIGNED	JEB 02/10/10
SURF AREA(m^2)		CHECKED	
MASS(kg)		APPROVED	
PRI REFRIG			
PRODUCT FAM			

CONFIDENTIAL: PROPERTY OF DANFOSS COMMERCIAL COMPRESSORS. NOT TO BE HANDED OVER TO, COPIED OR USED BY THIRD PARTY, TWO OR THREE DIMENSIONAL REPRODUCTION OF CONTENTS TO BE AUTHORIZED BY DANFOSS USCCA.

MAT NO
DWG NO 0XC6300B REV 38519
ECM NO 500000038519 SHT 1 of 1

Danfoss can accept no responsibility for possible errors in catalogues, brochures and other printed material. Danfoss reserves the right to alter its products without notice.
This also applies to products already on order provided that such alternations can be made without subsequential changes being necessary in specifications already agreed.
All trademarks in this material are property of the respective companies. Danfoss, the Danfoss logotype and Maneurop are trademarks of Danfoss A/S. All rights reserved.

General Characteristics

Model number (on compressor nameplate)		**MLZ021T5LT9**
Code number for Singlepack*		121U8525
Code number for Industrial pack**		121U8524
Drawing number		0XC6290B-1
Suction and discharge connections		Rotolock
Suction connection		1-1/4 " Rotolock
Discharge connection		1 " Rotolock
Suction connection with supplied sleeve		3/4 " -
Discharge connection with supplied sleeve	- "	1/2 " -
Oil sight glass		Threaded
Oil equalisation connection		None
Oil drain connection		None
LP gauge port		None
IPR valve		None
Swept volume	46,21 cm3/rev	
Displacement @ Nominal speed	8.0 m3/h @ 2900 rpm	
Net weight	31 kg	
Oil charge	1,06 litre, PVE - -	
Maximum system test pressure Low Side / High side	- bar(g) / - bar(g)	
Maximum differential test pressure	- bar	
Maximum number of starts per hour	12	
Refrigerant charge limit	3,63 kg	
Approved refrigerants	R404A, R507, R134a, R407A, R407C, R407F, R22	

Dimensions

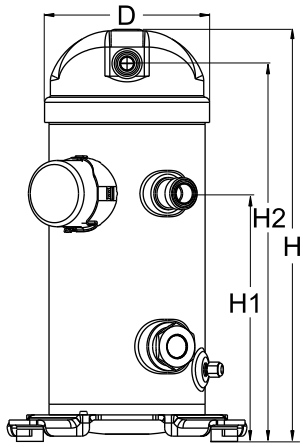

D=184 mm
H=412,1 mm
H1=249,8 mm
H2=379,4 mm
H3=- mm

Electrical Characteristics

Nominal voltage	230V/1/50Hz
Voltage range	207-253 V
Winding resistance (main / start) at 25°C	0,689 Ω / 1,509 Ω
Run capacitors A + C	70 µF + - µF
Start capacitor B	145-175 µF
Start relay	RVA9CKL
Rated Load Amps (RLA)	16 A
Maximum Continuous Current (MCC)	25 A
Locked Rotor Amps (LRA)	97 A
Motor protection	Internal overload protector

Terminal box

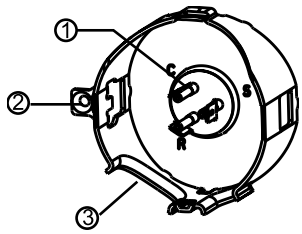

IP22
1: Spade connectors 1/4"
2: Earth connection
3: Power cable passage

Recommended Installation torques

Oil sight glass	52,5 Nm
Power connections / Earth connection	0 Nm / 0 Nm

Parts shipped with compressor

Mounting kit with grommets and sleeves
Initial oil charge
Installation instructions

Approvals : CE certified, -, -

*Singlepack: Compressor in cardboard box. 121U... optimised for Danfoss pallet, 120U... optimised for US pallet

**Industrial pack: 121U..: 12 unboxed compressors on Danfoss pallet. 120U..: 16 unboxed compressors on US pallet

Danfoss can accept no responsibility for possible errors in catalogues, brochures and other printed material. Danfoss reserves the right to alter its products without notice.
This also applies to products already on order provided that such alternations can be made without subsequential changes being necessary in specifications already agreed.
All trademarks in this material are property of the respective companies. Danfoss and the Danfoss logotype are trademarks of Danfoss A/S. All rights reserved.

Rotolock accessories, suction side	Code no.
Angle adapter, C04 (1-1/4" Rotolock, 3/4" ODF)	8168006
Rotolock valve, V04 (1-1/4" Rotolock, 3/4" ODF)	8168029
Gasket, 1-1/4"	8156131

Rotolock accessories, discharge side	Code no.
Angle adapter, C01 (1" Rotolock, 3/8" ODF)	8168004
Rotolock valve, V06 (1" Rotolock, 1/2" ODF)	8168031
Gasket, 1"	8156130

Rotolock accessories, sets	Code no.
Teflon seals, sleeves, nuts for discharge and suction (1" and 1"1/4)	120Z5074
Gasket set, 1", 1-1/4", 1-3/4", OSG gaskets black & white	8156009

Oil / lubricants	Code no.
PVE lubricant, 320HV (FVC68D), 1 litre can	120Z5034

Crankcase heaters	Code no.
Belt type crankcase heater, 70 W, 240 V, CE mark, UL	120Z5040

Miscellaneous accessories	Code no.
Acoustic hood	120Z5043
Discharge thermostat kit	7750009

Spare parts	Code no.
Mounting kit for 1 scroll compressor including 4 grommets, 4 sleeves, 4 bolts, 4 washers	120Z5005

Gaskets, sleeves and nuts

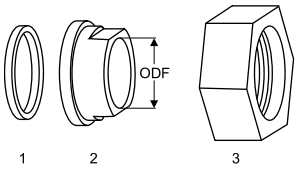

1: Gasket
2: Solder sleeve
3: Rotolock nut

Danfoss can accept no responsibility for possible errors in catalogues, brochures and other printed material. Danfoss reserves the right to alter its products without notice.
This also applies to products already on order provided that such alternations can be made without subsequential changes being necessary in specifications already agreed.
All trademarks in this material are property of the respective companies. Danfoss and the Danfoss logotype are trademarks of Danfoss A/S. All rights reserved.

Performance data at 50 Hz, EN 12900 rating conditions, Superheat = 10 K

R22

Cond. temp. in °C (tc)	Evaporating temperature in °C (to)								
	-20	-15	-10	-5	0	5	10		
Cooling capacity in W									
16	4 212	5 058	6 018	7 138	-	-	-	-	-
20	4 084	4 914	5 851	6 939	8 224	-	-	-	-
30	3 731	4 526	5 407	6 421	7 613	9 024	10 694	-	-
40	3 317	4 081	4 911	5 855	6 958	8 264	9 813	-	-
50	-	3 557	4 341	5 219	6 238	7 443	8 877	-	-
60	-	-	-	4 493	5 432	6 541	7 864	-	-
68	-	-	-	-	-	5 745	6 983	-	-
Power input in W									
16	1 048	1 082	1 116	1 152	-	-	-	-	-
20	1 184	1 211	1 237	1 263	1 293	-	-	-	-
30	1 518	1 533	1 545	1 555	1 567	1 581	1 600	-	-
40	1 872	1 882	1 887	1 890	1 891	1 894	1 900	-	-
50	-	2 288	2 295	2 298	2 298	2 298	2 298	-	-
60	-	-	-	2 812	2 818	2 822	2 825	-	-
68	-	-	-	-	-	3 350	3 361	-	-
Current consumption in A									
16	5.60	5.79	5.97	6.16	-	-	-	-	-
20	6.33	6.47	6.61	6.76	6.91	-	-	-	-
30	8.12	8.20	8.26	8.32	8.38	8.45	8.56	-	-
40	10.01	10.06	10.09	10.11	10.11	10.13	10.16	-	-
50	-	12.24	12.28	12.29	12.29	12.29	12.29	-	-
60	-	-	-	15.03	15.07	15.09	15.11	-	-
68	-	-	-	-	-	17.91	17.98	-	-
Mass flow in kg/h									
16	80	96	114	134	-	-	-	-	-
20	80	96	113	133	157	-	-	-	-
30	79	95	112	132	155	182	213	-	-
40	76	92	110	130	153	180	211	-	-
50	-	87	106	126	150	177	208	-	-
60	-	-	-	120	144	172	204	-	-
68	-	-	-	-	-	166	199	-	-
Coefficient of performance (C.O.P.)									
16	4.02	4.67	5.39	6.20	-	-	-	-	-
20	3.45	4.06	4.73	5.49	6.36	-	-	-	-
30	2.46	2.95	3.50	4.13	4.86	5.71	6.68	-	-
40	1.77	2.17	2.60	3.10	3.68	4.36	5.17	-	-
50	-	1.55	1.89	2.27	2.71	3.24	3.86	-	-
60	-	-	-	1.60	1.93	2.32	2.78	-	-
68	-	-	-	-	-	1.72	2.08	-	-

Nominal performance at to = -10 °C, tc = 45 °C

Cooling capacity	4 637	W
Power input	2 081	W
Current consumption	11.13	A
Mass flow	108	kg/h
C.O.P.	2.23	

to: Evaporating temperature at dew point
tc: Condensing temperature at dew point
Rating conditions : Superheat = 10 K , Subcooling = 0 K

Pressure switch settings

Maximum HP switch setting	29.8	bar(g)
Minimum LP switch setting	0.5	bar(g)
LP pump down setting	0.95	bar(g)

Sound power data

Sound power level	67	dB(A)
With accoustic hood	59	dB(A)

All performance data +/- 5%

Danfoss can accept no responsibility for possible errors in catalogues, brochures and other printed material. Danfoss reserves the right to alter its products without notice.
This also applies to products already on order provided that such alternations can be made without subsequential changes being necessary in specifications already agreed.
All trademarks in this material are property of the respective companies. Danfoss and the Danfoss logotype are trademarks of Danfoss A/S. All rights reserved.

Performance data at 50 Hz, EN 12900 rating conditions, Suction temp. = 20 °C

R22

Cond. temp. in °C (tc)	Evaporating temperature in °C (to)								
	-20	-15	-10	-5	0	5	10		
Cooling capacity in W									
16	4 110	4 950	5 908	7 033	-	-	-	-	-
20	3 995	4 820	5 754	6 847	8 144	-	-	-	-
30	3 677	4 467	5 346	6 360	7 558	8 987	10 694	-	-
40	-	4 058	4 884	5 826	6 930	8 243	9 813	-	-
50	-	-	-	5 223	6 237	7 439	8 877	-	-
60	-	-	-	-	5 457	6 553	7 864	-	-
68	-	-	-	-	-	-	6 983	-	-
Power input in W									
16	1 048	1 082	1 116	1 152	-	-	-	-	-
20	1 184	1 211	1 237	1 263	1 293	-	-	-	-
30	1 518	1 533	1 545	1 555	1 567	1 581	1 600	-	-
40	-	1 882	1 887	1 890	1 891	1 894	1 900	-	-
50	-	-	-	2 298	2 298	2 298	2 298	-	-
60	-	-	-	-	2 818	2 822	2 825	-	-
68	-	-	-	-	-	-	3 361	-	-
Current consumption in A									
16	5.60	5.79	5.97	6.16	-	-	-	-	-
20	6.33	6.47	6.61	6.76	6.91	-	-	-	-
30	8.12	8.20	8.26	8.32	8.38	8.45	8.56	-	-
40	-	10.06	10.09	10.11	10.11	10.13	10.16	-	-
50	-	-	-	12.29	12.29	12.29	12.29	-	-
60	-	-	-	-	15.07	15.09	15.11	-	-
68	-	-	-	-	-	-	17.98	-	-
Mass flow in kg/h									
16	71	86	104	125	-	-	-	-	-
20	71	86	104	125	150	-	-	-	-
30	70	85	103	123	148	177	213	-	-
40	-	83	101	121	146	175	211	-	-
50	-	-	-	118	143	173	208	-	-
60	-	-	-	-	138	168	204	-	-
68	-	-	-	-	-	-	199	-	-
Coefficient of performance (C.O.P.)									
16	3.92	4.57	5.29	6.11	-	-	-	-	-
20	3.38	3.98	4.65	5.42	6.30	-	-	-	-
30	2.42	2.91	3.46	4.09	4.82	5.68	6.68	-	-
40	-	2.16	2.59	3.08	3.66	4.35	5.17	-	-
50	-	-	-	2.27	2.71	3.24	3.86	-	-
60	-	-	-	-	1.94	2.32	2.78	-	-
68	-	-	-	-	-	-	2.08	-	-

Nominal performance at to = -10 °C, tc = 45 °C

Cooling capacity	4 628	W
Power input	2 081	W
Current consumption	11.13	A
Mass flow	99	kg/h
C.O.P.	2.22	

to: Evaporating temperature at dew point
tc: Condensing temperature at dew point
Rating conditions : Suction gas temp. = 20 °C , Subcooling = 0 K

Pressure switch settings

Maximum HP switch setting	29.8	bar(g)
Minimum LP switch setting	0.5	bar(g)
LP pump down setting	0.95	bar(g)

Sound power data

Sound power level	67	dB(A)
With accoustic hood	59	dB(A)

All performance data +/- 5%

Danfoss can accept no responsibility for possible errors in catalogues, brochures and other printed material. Danfoss reserves the right to alter its products without notice.
This also applies to products already on order provided that such alternations can be made without subsequential changes being necessary in specifications already agreed.
All trademarks in this material are property of the respective companies. Danfoss and the Danfoss logotype are trademarks of Danfoss A/S. All rights reserved.

Performance data at 50 Hz, EN 12900 rating conditions, Superheat = 10 K

R134a

Cond. temp. in °C (tc)	Evaporating temperature in °C (to)								
	-15	-10	-5	0	5	10	15		
Cooling capacity in W									
22	2 787	3 527	4 368	5 316	6 376	-	-	-	-
30	2 558	3 266	4 083	5 015	6 066	7 243	-	-	-
40	2 259	2 899	3 658	4 542	5 554	6 702	7 989	-	-
50	-	2 521	3 191	3 995	4 937	6 024	7 260	-	-
60	-	-	2 716	3 409	4 250	5 245	6 399	-	-
70	-	-	-	2 820	3 529	4 401	5 442	-	-
73	-	-	-	2 648	3 312	4 141	5 141	-	-
Power input in W									
22	1 001	1 009	1 030	1 059	1 095	-	-	-	-
30	1 141	1 149	1 171	1 200	1 235	1 271	-	-	-
40	1 348	1 359	1 381	1 411	1 444	1 479	1 510	-	-
50	-	1 622	1 645	1 676	1 709	1 742	1 771	-	-
60	-	-	1 982	2 013	2 047	2 079	2 107	-	-
70	-	-	-	2 442	2 476	2 508	2 534	-	-
73	-	-	-	2 590	2 625	2 657	2 682	-	-
Current consumption in A									
22	5.36	5.40	5.51	5.67	5.86	-	-	-	-
30	6.10	6.15	6.26	6.42	6.60	6.80	-	-	-
40	7.21	7.26	7.38	7.54	7.72	7.91	8.07	-	-
50	-	8.67	8.80	8.96	9.14	9.32	9.47	-	-
60	-	-	10.60	10.77	10.95	11.12	11.26	-	-
70	-	-	-	13.06	13.24	13.41	13.55	-	-
73	-	-	-	13.85	14.04	14.21	14.34	-	-
Mass flow in kg/h									
22	59	74	91	108	127	-	-	-	-
30	59	74	91	109	130	152	-	-	-
40	57	72	89	109	130	154	180	-	-
50	-	70	87	106	128	153	181	-	-
60	-	-	84	103	125	150	179	-	-
70	-	-	-	99	121	146	175	-	-
73	-	-	-	98	119	144	173	-	-
Coefficient of performance (C.O.P.)									
22	2.78	3.50	4.24	5.02	5.82	-	-	-	-
30	2.24	2.84	3.49	4.18	4.91	5.70	-	-	-
40	1.68	2.13	2.65	3.22	3.85	4.53	5.29	-	-
50	-	1.55	1.94	2.38	2.89	3.46	4.10	-	-
60	-	-	1.37	1.69	2.08	2.52	3.04	-	-
70	-	-	-	1.16	1.43	1.76	2.15	-	-
73	-	-	-	1.02	1.26	1.56	1.92	-	-

Nominal performance at to = -10 °C, tc = 45 °C

Cooling capacity	2 709	W
Power input	1 482	W
Current consumption	7.93	A
Mass flow	71	kg/h
C.O.P.	1.83	

to: Evaporating temperature at dew point
tc: Condensing temperature at dew point
Rating conditions : Superheat = 10 K , Subcooling = 0 K

Pressure switch settings

Maximum HP switch setting	23.6	bar(g)
Minimum LP switch setting	0.45	bar(g)
LP pump down setting	0.85	bar(g)

Sound power data

Sound power level	67	dB(A)
With accoustic hood	59	dB(A)

All performance data +/- 5%

Danfoss can accept no responsibility for possible errors in catalogues, brochures and other printed material. Danfoss reserves the right to alter its products without notice.
This also applies to products already on order provided that such alternations can be made without subsequential changes being necessary in specifications already agreed.
All trademarks in this material are property of the respective companies. Danfoss and the Danfoss logotype are trademarks of Danfoss A/S. All rights reserved.

Performance data at 50 Hz, EN 12900 rating conditions, Suction temp. = 20 °C

R134a

Cond. temp. in °C (tc)	Evaporating temperature in °C (to)								
	-15	-10	-5	0	5	10	15		
Cooling capacity in W									
22	2 832	3 568	4 402	5 339	6 387	-	-	-	-
30	-	3 326	4 135	5 053	6 087	7 243	-	-	-
40	-	-	3 734	4 600	5 587	6 702	7 952	-	-
50	-	-	3 288	4 072	4 983	6 024	7 202	-	-
60	-	-	-	3 504	4 307	5 245	-	-	-
70	-	-	-	-	3 598	4 401	-	-	-
73	-	-	-	-	3 383	4 141	-	-	-
Power input in W									
22	1 001	1 009	1 030	1 059	1 095	-	-	-	-
30	-	1 149	1 171	1 200	1 235	1 271	-	-	-
40	-	-	1 381	1 411	1 444	1 479	1 510	-	-
50	-	-	1 645	1 676	1 709	1 742	1 771	-	-
60	-	-	-	2 013	2 047	2 079	-	-	-
70	-	-	-	-	2 476	2 508	-	-	-
73	-	-	-	-	2 625	2 657	-	-	-
Current consumption in A									
22	5.36	5.40	5.51	5.67	5.86	-	-	-	-
30	-	6.15	6.26	6.42	6.60	6.80	-	-	-
40	-	-	7.38	7.54	7.72	7.91	8.07	-	-
50	-	-	8.80	8.96	9.14	9.32	9.47	-	-
60	-	-	-	10.77	10.95	11.12	-	-	-
70	-	-	-	-	13.24	13.41	-	-	-
73	-	-	-	-	14.04	14.21	-	-	-
Mass flow in kg/h									
22	53	68	85	103	124	-	-	-	-
30	-	68	85	104	127	152	-	-	-
40	-	-	84	104	127	154	185	-	-
50	-	-	81	102	125	153	186	-	-
60	-	-	-	98	122	150	-	-	-
70	-	-	-	-	118	146	-	-	-
73	-	-	-	-	116	144	-	-	-
Coefficient of performance (C.O.P.)									
22	2.83	3.54	4.28	5.04	5.83	-	-	-	-
30	-	2.89	3.53	4.21	4.93	5.70	-	-	-
40	-	-	2.70	3.26	3.87	4.53	5.27	-	-
50	-	-	2.00	2.43	2.92	3.46	4.07	-	-
60	-	-	-	1.74	2.10	2.52	-	-	-
70	-	-	-	-	1.45	1.76	-	-	-
73	-	-	-	-	1.29	1.56	-	-	-

Nominal performance at to = -10 °C, tc = 45 °C

Cooling capacity	-	W
Power input	-	W
Current consumption	-	A
Mass flow	-	kg/h
C.O.P.	-	

Pressure switch settings

Maximum HP switch setting	23.6	bar(g)
Minimum LP switch setting	0.45	bar(g)
LP pump down setting	0.85	bar(g)

Sound power data

Sound power level	67	dB(A)
With accoustic hood	59	dB(A)

to: Evaporating temperature at dew point
tc: Condensing temperature at dew point
Rating conditions : Suction gas temp. = 20 °C , Subcooling = 0 K

All performance data +/- 5%

Danfoss can accept no responsibility for possible errors in catalogues, brochures and other printed material. Danfoss reserves the right to alter its products without notice.
This also applies to products already on order provided that such alternations can be made without subsequential changes being necessary in specifications already agreed.
All trademarks in this material are property of the respective companies. Danfoss and the Danfoss logotype are trademarks of Danfoss A/S. All rights reserved.

Performance data at 50 Hz, EN 12900 rating conditions, Suction temp. = 20 °C

R404A

Cond. temp. in °C (tc)	Evaporating temperature in °C (to)								
	-30	-25	-20	-15	-10	-5	0	5	10
Cooling capacity in W									
10	2 705	3 400	4 252	5 276	6 488	-	-	-	-
20	2 568	3 277	4 122	5 119	6 284	7 633	9 182	-	-
30	2 338	3 028	3 835	4 773	5 860	7 110	8 539	10 164	12 000
40	-	2 679	3 415	4 263	5 239	6 359	7 637	9 091	10 736
50	-	-	2 887	3 613	4 447	5 404	6 501	7 752	9 173
60	-	-	-	-	3 508	4 271	5 153	6 170	7 337
Power input in W									
10	1 124	1 139	1 156	1 173	1 184	-	-	-	-
20	1 386	1 396	1 415	1 439	1 464	1 486	1 502	-	-
30	1 707	1 705	1 718	1 742	1 773	1 808	1 843	1 874	1 896
40	-	2 095	2 095	2 112	2 142	2 182	2 228	2 276	2 322
50	-	-	2 574	2 576	2 598	2 636	2 686	2 744	2 807
60	-	-	-	-	3 172	3 200	3 246	3 307	3 378
Current consumption in A									
10	7.47	7.40	7.29	7.14	6.95	-	-	-	-
20	9.00	9.05	9.06	9.07	9.05	9.02	8.99	-	-
30	10.00	10.09	10.17	10.26	10.36	10.46	10.57	10.70	10.84
40	-	10.92	11.01	11.12	11.26	11.42	11.62	11.85	12.12
50	-	-	11.96	12.04	12.16	12.32	12.54	12.81	13.14
60	-	-	-	-	13.44	13.55	13.72	13.97	14.30
Mass flow in kg/h									
10	54	69	87	108	133	-	-	-	-
20	56	73	92	114	141	173	211	-	-
30	57	74	94	118	145	178	217	263	316
40	-	73	94	118	146	180	219	266	319
50	-	-	91	115	144	178	217	264	318
60	-	-	-	-	138	171	211	257	311
Coefficient of performance (C.O.P.)									
10	2.41	2.99	3.68	4.50	5.48	-	-	-	-
20	1.85	2.35	2.91	3.56	4.29	5.14	6.11	-	-
30	1.37	1.78	2.23	2.74	3.30	3.93	4.63	5.42	6.33
40	-	1.28	1.63	2.02	2.45	2.91	3.43	3.99	4.62
50	-	-	1.12	1.40	1.71	2.05	2.42	2.82	3.27
60	-	-	-	-	1.11	1.33	1.59	1.87	2.17

Nominal performance at to = -10 °C, tc = 45 °C

Cooling capacity	4 863	W
Power input	2 357	W
Current consumption	11.68	A
Mass flow	146	kg/h
C.O.P.	2.06	

CERTIFIED PRODUCT ASERCOM

Pressure switch settings

Maximum HP switch setting	29.7	bar(g)
Minimum LP switch setting	1.4	bar(g)
LP pump down setting	2	bar(g)

Sound power data

Sound power level	67	dB(A)
With accoustic hood	59	dB(A)

to: Evaporating temperature at dew point
tc: Condensing temperature at dew point
Rating conditions : Suction gas temp. = 20 °C , Subcooling = 0 K

All performance data +/- 5%

Danfoss can accept no responsibility for possible errors in catalogues, brochures and other printed material. Danfoss reserves the right to alter its products without notice.
This also applies to products already on order provided that such alternations can be made without subsequential changes being necessary in specifications already agreed.
All trademarks in this material are property of the respective companies. Danfoss and the Danfoss logotype are trademarks of Danfoss A/S. All rights reserved.

Performance data at 50 Hz, EN 12900 rating conditions, Superheat = 10 K

R404A

Cond. temp. in °C (tc)	Evaporating temperature in °C (to)								
	-30	-25	-20	-15	-10	-5	0	5	10
Cooling capacity in W									
10	2 599	3 290	4 143	5 174	6 402	-	-	-	-
20	2 415	3 112	3 952	4 953	6 133	7 508	9 095	-	-
30	2 139	2 807	3 601	4 539	5 639	6 920	8 398	10 088	12 000
40	1 796	2 403	3 119	3 961	4 949	6 102	7 439	8 979	10 736
50	-	-	2 533	3 247	4 090	5 082	6 246	7 603	9 173
60	-	-	-	-	3 087	3 886	4 842	5 983	7 337
Power input in W									
10	1 124	1 139	1 156	1 173	1 184	-	-	-	-
20	1 386	1 396	1 415	1 439	1 464	1 486	1 502	-	-
30	1 707	1 705	1 718	1 742	1 773	1 808	1 843	1 874	1 896
40	2 116	2 095	2 095	2 112	2 142	2 182	2 228	2 276	2 322
50	-	-	2 574	2 576	2 598	2 636	2 686	2 744	2 807
60	-	-	-	-	3 172	3 200	3 246	3 307	3 378
Current consumption in A									
10	7.47	7.40	7.29	7.14	6.95	-	-	-	-
20	9.00	9.05	9.06	9.07	9.05	9.02	8.99	-	-
30	10.00	10.09	10.17	10.26	10.36	10.46	10.57	10.70	10.84
40	10.85	10.92	11.01	11.12	11.26	11.42	11.62	11.85	12.12
50	-	-	11.96	12.04	12.16	12.32	12.54	12.81	13.14
60	-	-	-	-	13.44	13.55	13.72	13.97	14.30
Mass flow in kg/h									
10	64	81	100	122	147	-	-	-	-
20	67	85	105	129	156	187	222	-	-
30	67	86	108	132	160	193	229	270	316
40	66	86	108	133	162	194	232	273	319
50	-	-	105	130	159	192	229	271	318
60	-	-	-	-	152	185	223	264	311
Coefficient of performance (C.O.P.)									
10	2.31	2.89	3.58	4.41	5.41	-	-	-	-
20	1.74	2.23	2.79	3.44	4.19	5.05	6.05	-	-
30	1.25	1.65	2.10	2.61	3.18	3.83	4.56	5.38	6.33
40	0.85	1.15	1.49	1.88	2.31	2.80	3.34	3.95	4.62
50	-	-	0.98	1.26	1.57	1.93	2.33	2.77	3.27
60	-	-	-	-	0.97	1.21	1.49	1.81	2.17

Nominal performance at to = -10 °C, tc = 45 °C

Cooling capacity	4 539	W
Power input	2 357	W
Current consumption	11.68	A
Mass flow	161	kg/h
C.O.P.	1.93	

to: Evaporating temperature at dew point
tc: Condensing temperature at dew point
Rating conditions : Superheat = 10 K , Subcooling = 0 K

Pressure switch settings

Maximum HP switch setting	29.7	bar(g)
Minimum LP switch setting	1.4	bar(g)
LP pump down setting	2	bar(g)

Sound power data

Sound power level	67	dB(A)
With accoustic hood	59	dB(A)

All performance data +/- 5%

Danfoss can accept no responsibility for possible errors in catalogues, brochures and other printed material. Danfoss reserves the right to alter its products without notice.
This also applies to products already on order provided that such alternations can be made without subsequential changes being necessary in specifications already agreed.
All trademarks in this material are property of the respective companies. Danfoss and the Danfoss logotype are trademarks of Danfoss A/S. All rights reserved.

Performance data at 50 Hz, EN 12900 rating conditions

R407F

Cond. temp. in °C (tc)	Evaporating temperature in °C (to)								
	-23	-20	-15	-10	-5	0	5	10	
Cooling capacity in W									
10	3 823	4 387	5 469	6 746	-	-	-	-	-
20	3 436	3 971	4 993	6 196	7 602	9 232	-	-	-
30	3 012	3 513	4 464	5 582	6 888	8 405	10 153	12 157	-
40	2 558	3 017	3 887	4 909	6 106	7 498	9 108	10 958	-
45	-	-	3 582	4 553	5 690	7 016	8 553	10 322	-
50	-	-	-	4 184	5 259	6 517	7 977	9 663	-
55	-	-	-	-	4 814	6 000	7 382	8 982	-
60	-	-	-	-	-	-	-	-	-
Power input in W									
10	1 172	1 182	1 202	1 234	-	-	-	-	-
20	1 360	1 373	1 390	1 410	1 441	1 489	-	-	-
30	1 639	1 658	1 681	1 700	1 720	1 749	1 795	1 864	-
40	2 034	2 066	2 104	2 128	2 147	2 166	2 194	2 237	-
45	-	-	2 372	2 403	2 424	2 442	2 464	2 498	-
50	-	-	-	2 723	2 749	2 768	2 786	2 812	-
55	-	-	-	-	3 124	3 146	3 163	3 184	-
60	-	-	-	-	-	-	-	-	-
Current consumption in A									
10	8.20	8.17	8.12	8.06	-	-	-	-	-
20	8.92	8.93	8.95	8.96	8.97	8.97	-	-	-
30	9.65	9.70	9.77	9.84	9.89	9.95	10.01	10.08	-
40	10.86	10.93	11.04	11.14	11.24	11.33	11.43	11.53	-
45	-	-	11.99	12.10	12.21	12.31	12.42	12.54	-
50	-	-	-	13.34	13.45	13.57	13.69	13.81	-
55	-	-	-	-	15.03	15.15	15.27	15.40	-
60	-	-	-	-	-	-	-	-	-
Mass flow in kg/h									
10	67	76	94	114	-	-	-	-	-
20	65	74	92	113	137	164	-	-	-
30	62	72	90	110	134	162	193	229	-
40	58	68	86	107	131	158	190	225	-
45	-	-	83	104	128	156	187	223	-
50	-	-	-	101	125	153	184	220	-
55	-	-	-	-	122	150	181	217	-
60	-	-	-	-	-	-	-	-	-
Coefficient of performance (C.O.P.)									
10	3.26	3.71	4.55	5.47	-	-	-	-	-
20	2.53	2.89	3.59	4.39	5.28	6.20	-	-	-
30	1.84	2.12	2.65	3.28	4.01	4.81	5.66	6.52	-
40	1.26	1.46	1.85	2.31	2.84	3.46	4.15	4.90	-
45	-	-	1.51	1.89	2.35	2.87	3.47	4.13	-
50	-	-	-	1.54	1.91	2.35	2.86	3.44	-
55	-	-	-	-	1.54	1.91	2.33	2.82	-
60	-	-	-	-	-	-	-	-	-

Nominal performance at to = -10 °C, tc = 45 °C

Cooling capacity	4 553	W
Power input	2 403	W
Current consumption	12.10	A
Mass flow	104	kg/h
C.O.P.	1.89	

Pressure switch settings

Maximum HP switch setting	29.7	bar(g)
Minimum LP switch setting	1.4	bar(g)
LP pump down setting	2	bar(g)

Sound power data

Sound power level	67	dB(A)
With accoustic hood	59	dB(A)

to: Evaporating temperature at dew point
tc: Condensing temperature at dew point
Rating conditions : Superheat = 10 K , Subcooling = 0 K

All performance data +/- 5%

Danfoss can accept no responsibility for possible errors in catalogues, brochures and other printed material. Danfoss reserves the right to alter its products without notice.
This also applies to products already on order provided that such alternations can be made without subsequential changes being necessary in specifications already agreed.
All trademarks in this material are property of the respective companies. Danfoss and the Danfoss logotype are trademarks of Danfoss A/S. All rights reserved.

Performance data at 50 Hz, ARI rating conditions

R407F

Cond. temp. in °C (tc)	Evaporating temperature in °C (to)								
	-23	-20	-15	-10	-5	0	5	10	
Cooling capacity in W									
10	4 040	4 635	5 774	7 117	-	-	-	-	-
20	3 653	4 220	5 302	6 574	8 058	9 779	-	-	-
30	3 227	3 761	4 775	5 965	7 354	8 965	10 821	12 945	-
40	-	3 262	4 198	5 295	6 578	8 069	9 792	11 769	-
45	-	-	3 892	4 940	6 166	7 594	9 246	11 147	-
50	-	-	-	4 572	5 739	7 102	8 682	10 504	-
55	-	-	-	-	-	6 595	8 102	9 844	-
60	-	-	-	-	-	-	-	-	-
Power input in W									
10	1 172	1 182	1 202	1 234	-	-	-	-	-
20	1 360	1 373	1 390	1 410	1 441	1 489	-	-	-
30	1 639	1 658	1 681	1 700	1 720	1 749	1 795	1 864	-
40	-	2 066	2 104	2 128	2 147	2 166	2 194	2 237	-
45	-	-	2 372	2 403	2 424	2 442	2 464	2 498	-
50	-	-	-	2 723	2 749	2 768	2 786	2 812	-
55	-	-	-	-	-	3 146	3 163	3 184	-
60	-	-	-	-	-	-	-	-	-
Current consumption in A									
10	8.20	8.17	8.12	8.06	-	-	-	-	-
20	8.92	8.93	8.95	8.96	8.97	8.97	-	-	-
30	9.65	9.70	9.77	9.84	9.89	9.95	10.01	10.08	-
40	-	10.93	11.04	11.14	11.24	11.33	11.43	11.53	-
45	-	-	11.99	12.10	12.21	12.31	12.42	12.54	-
50	-	-	-	13.34	13.45	13.57	13.69	13.81	-
55	-	-	-	-	-	15.15	15.27	15.40	-
60	-	-	-	-	-	-	-	-	-
Mass flow in kg/h									
10	66	76	93	113	-	-	-	-	-
20	64	74	92	112	136	163	-	-	-
30	62	71	89	110	134	161	192	227	-
40	-	67	85	106	130	157	188	224	-
45	-	-	83	104	128	155	186	221	-
50	-	-	-	101	125	152	183	219	-
55	-	-	-	-	-	149	180	216	-
60	-	-	-	-	-	-	-	-	-
Coefficient of performance (C.O.P.)									
10	3.45	3.92	4.80	5.77	-	-	-	-	-
20	2.69	3.07	3.81	4.66	5.59	6.57	-	-	-
30	1.97	2.27	2.84	3.51	4.28	5.13	6.03	6.95	-
40	-	1.58	2.00	2.49	3.06	3.73	4.46	5.26	-
45	-	-	1.64	2.06	2.54	3.11	3.75	4.46	-
50	-	-	-	1.68	2.09	2.57	3.12	3.73	-
55	-	-	-	-	-	2.10	2.56	3.09	-
60	-	-	-	-	-	-	-	-	-

Nominal performance at to = -10 °C, tc = 45 °C

Cooling capacity	4 940	W
Power input	2 403	W
Current consumption	12.10	A
Mass flow	104	kg/h
C.O.P.	2.06	

Pressure switch settings

Maximum HP switch setting	29.7	bar(g)
Minimum LP switch setting	1.4	bar(g)
LP pump down setting	2	bar(g)

Sound power data

Sound power level	67	dB(A)
With accoustic hood	59	dB(A)

to: Evaporating temperature at dew point
tc: Condensing temperature at dew point
Rating conditions : Superheat = 11.1 K , Subcooling = 8.3 K

All performance data +/- 5%

Danfoss can accept no responsibility for possible errors in catalogues, brochures and other printed material. Danfoss reserves the right to alter its products without notice.
This also applies to products already on order provided that such alternations can be made without subsequential changes being necessary in specifications already agreed.
All trademarks in this material are property of the respective companies. Danfoss and the Danfoss logotype are trademarks of Danfoss A/S. All rights reserved.

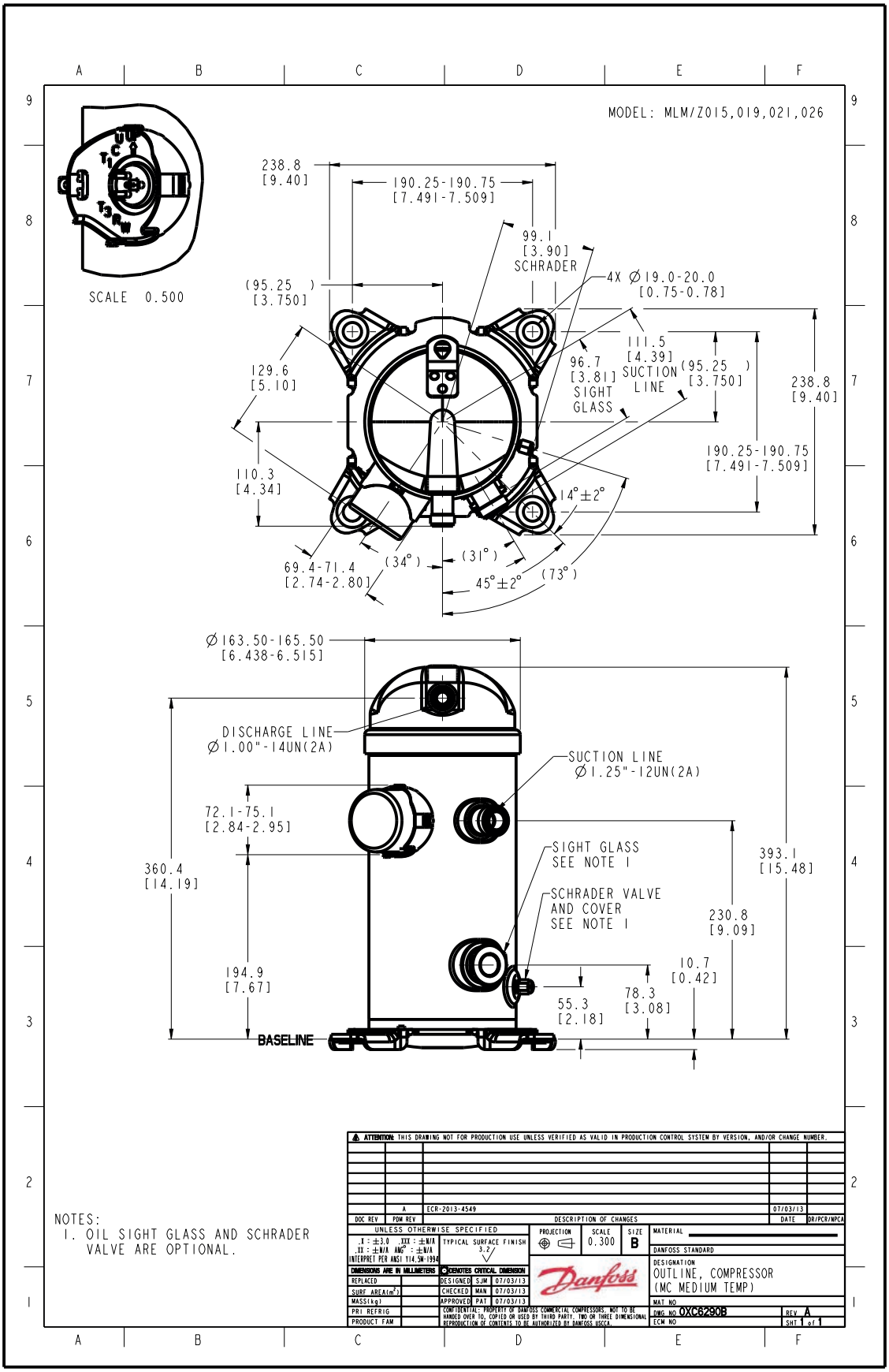

Danfoss can accept no responsibility for possible errors in catalogues, brochures and other printed material. Danfoss reserves the right to alter its products without notice.
This also applies to products already on order provided that such alternations can be made without subsequential changes being necessary in specifications already agreed.
All trademarks in this material are property of the respective companies. Danfoss, the Danfoss logotype and Maneurop are trademarks of Danfoss A/S. All rights reserved.